Southco® Push to Close Latches

Flush Simplicity

- **Pull to open**
- **Very low profile**
- **Corrosion-resistant materials**
- **Single, round-hole installation**

Latch

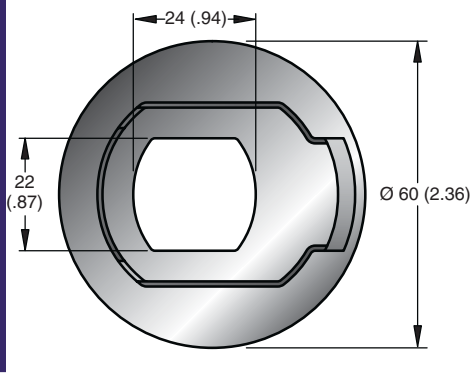

Mounting Cup

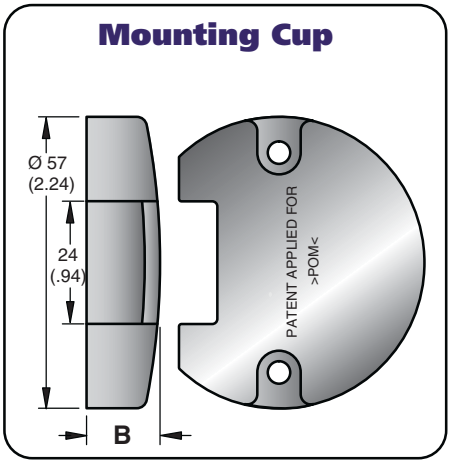

Lift the handle to open…

Push the door to latch.

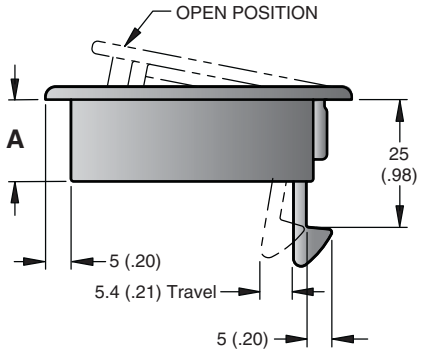

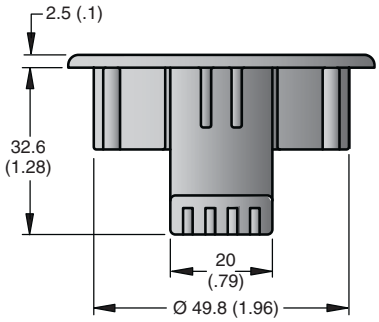

DOOR THICKNESS RANGE	A	B	PART NUMBER
1 (.04) - 7 (.28)	16 (.63)	20.4 (.80)	M1-81 •
7 (.28) - 13 (.51)	16 (.63)	14.3 (.57)	M1-82 •
13 (.51) - 19 (.75)	22 (.87)	14.3 (.57)	M1-83 •

Panel Preparation

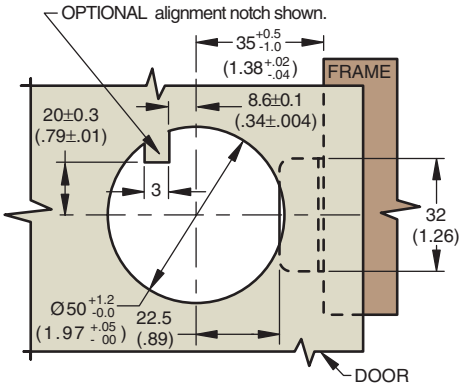

Align latch with frame, secure with mounting cup and self tapping screws (supplied with all parts).

CAUTION: Do not over-tighten screws.

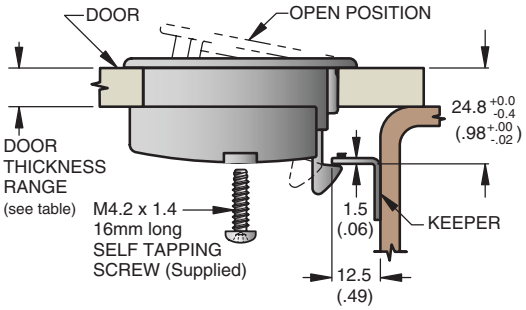

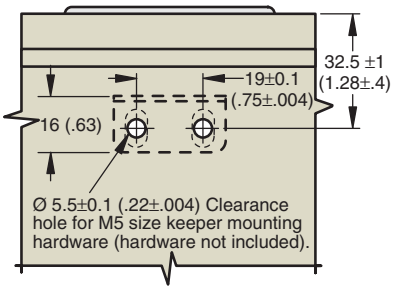

Material and Finish

LATCH and MOUNTING CUP: Acetal, black.
KEEPER: 304 Stainless steel, passivated.
SCREWS: 302 Stainless steel, passivated.

Minimum Pawl Engagement: 3.0 (.12)

Product Strength Guidelines

(To assist in your product selection; samples are available for your evaluation.)

Maximum static load: 135 N (30 lbs.)
Average ultimate load: 175 N (39 lbs.)
Maximum tightening torque on mounting screws: 0.5 to 0.8 N•m (4.4 to 7.1 in-lbs.)

Flammability Rating: UL94-HB
Operating Temperature Range:
-40°C (-40°F) to 80 °C (176°F)

millimeter (inch)
millimeter (inch)
Dimensions without tolerances are for reference only.

• Products identified with this symbol are stocked subject to prior sale in one or more of our global locations. If unavailable from our facility nearest you, allow for shipping time from another facility.